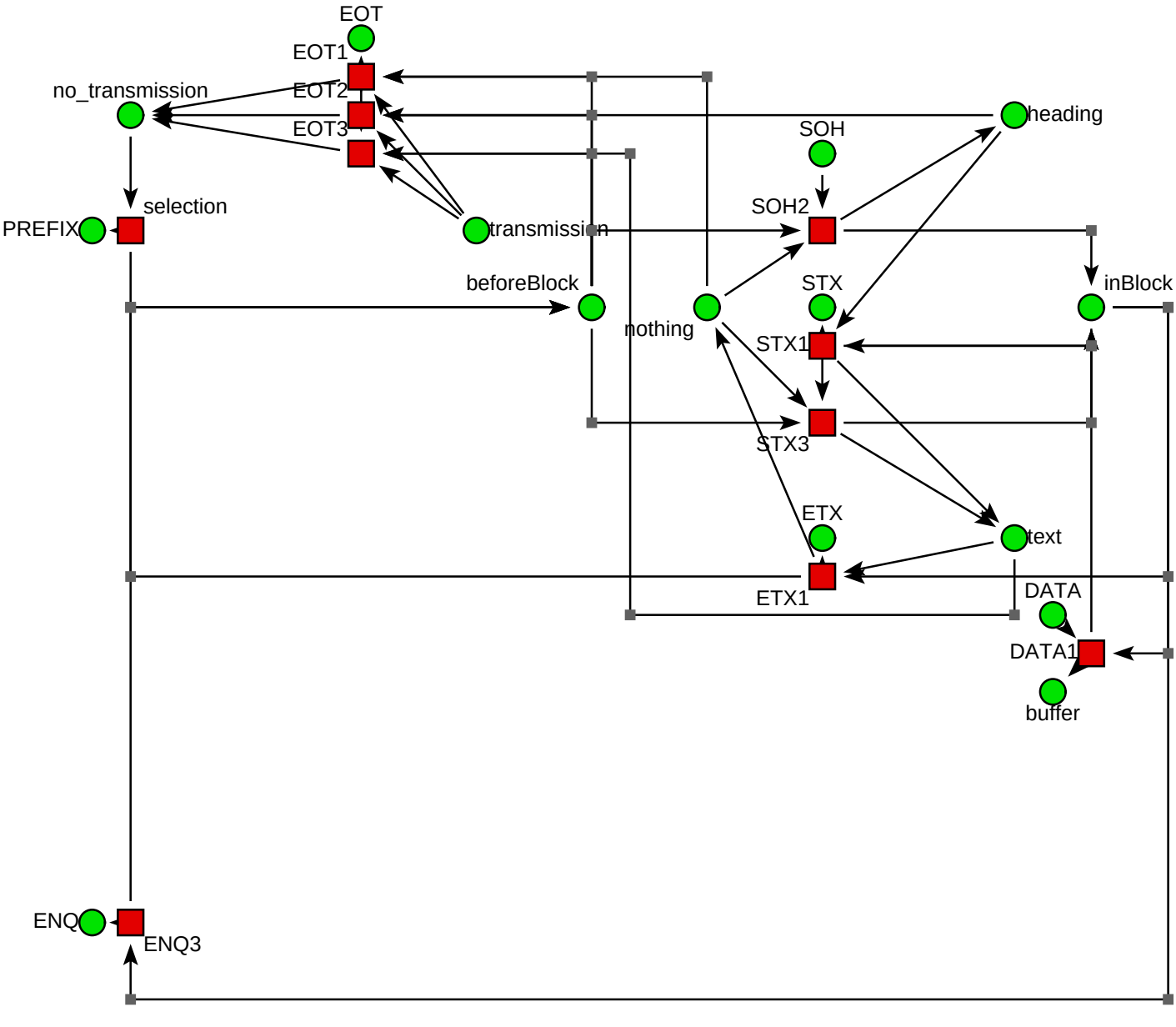
EOT
EOT1
EOT2
EOT3
no_transmission
heading
SOH
selection
PREFIX
transmission
SOH2
beforeBlock
STX
inBlock
nothing
STX1
STX3
ETX
text
ETX1
DATA
DATA1
buffer
ENQ
ENQ3